MCINTOSH C-8D PREAMP

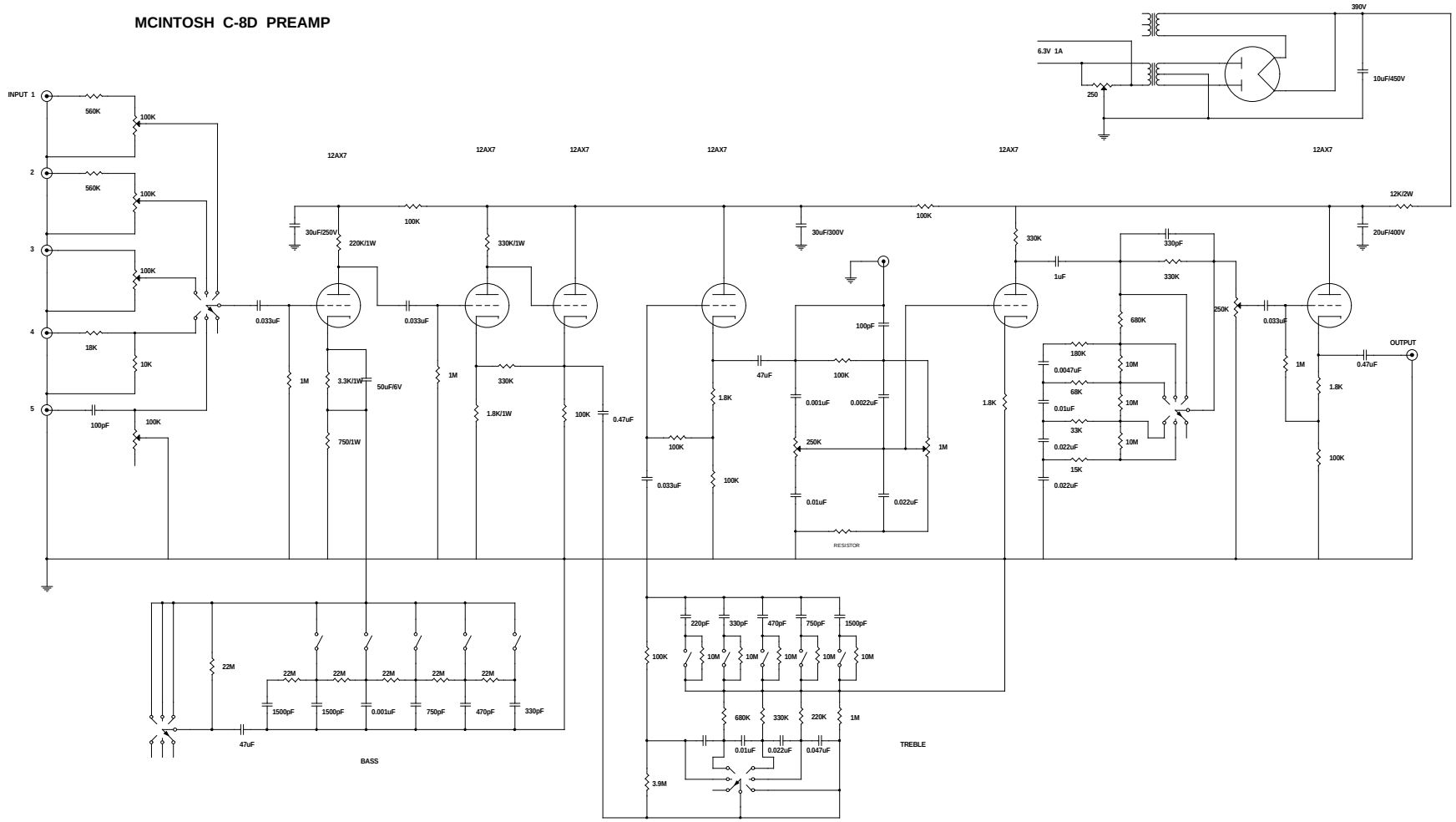

DIYZONE			
Title	(Title)		
Size D	Document Number (Doc)		Rev (Revision)
Date: Friday, August 20, 1999	Sheet 1 of 1		