LEAK TL-10 PREAMP / 10W KT61 PUSH-PULL POWER AMPLIFER

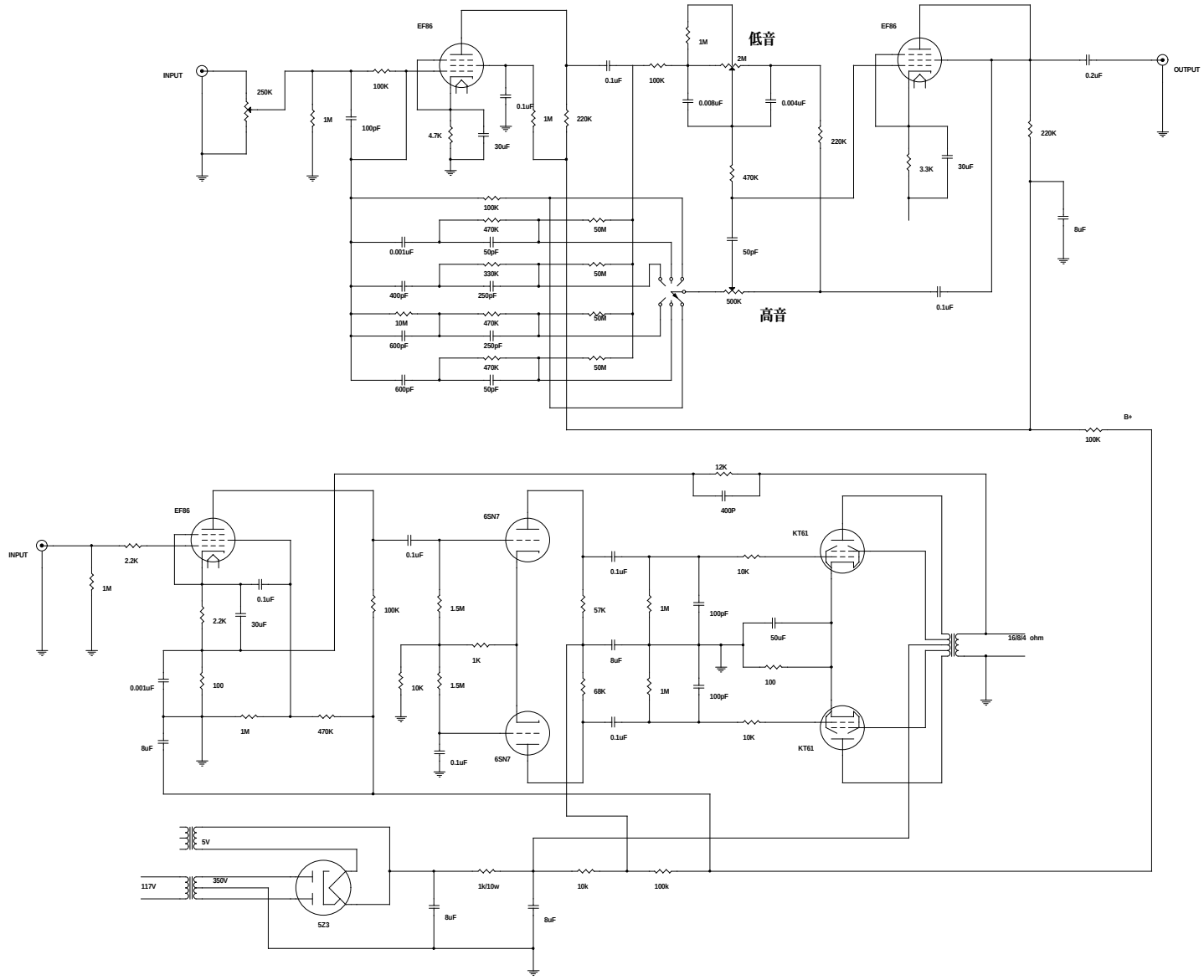

DIYZONE			
Title	(Title)		
Size D	Document Number (Doc)		Rev (Rev Code)
Date: Thursday, August 19, 1999	Sheet 1 of 1		