HEATHKIT W-5M KT66 Push Pull Power Amplifer

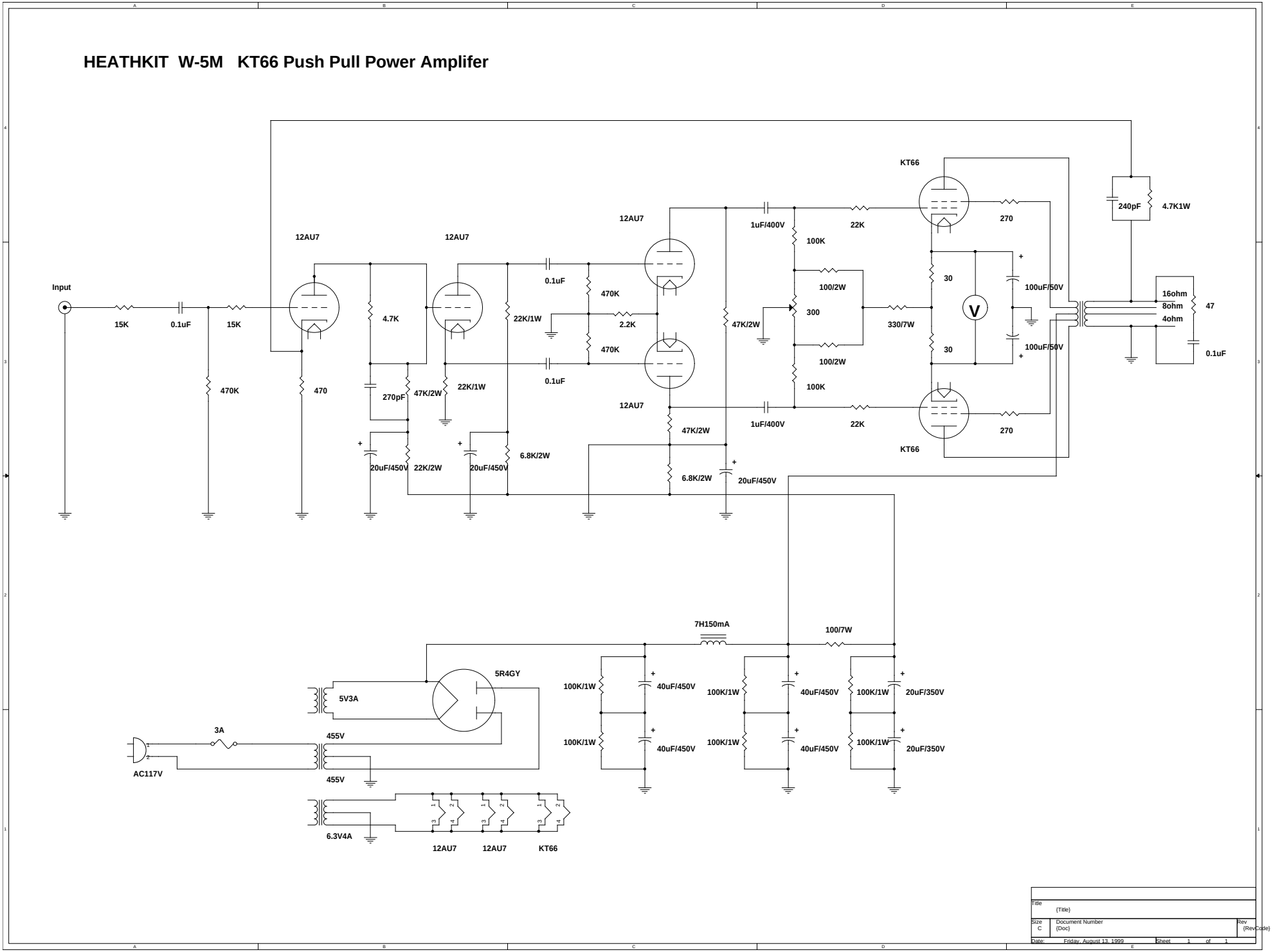

Title	{Title}	
Size C	Document Number {Doc}	Rev {RevCode}
Date: Friday, August 13, 1999	Sheet 1 of 1	