6L6GC Single End Power Amplifer

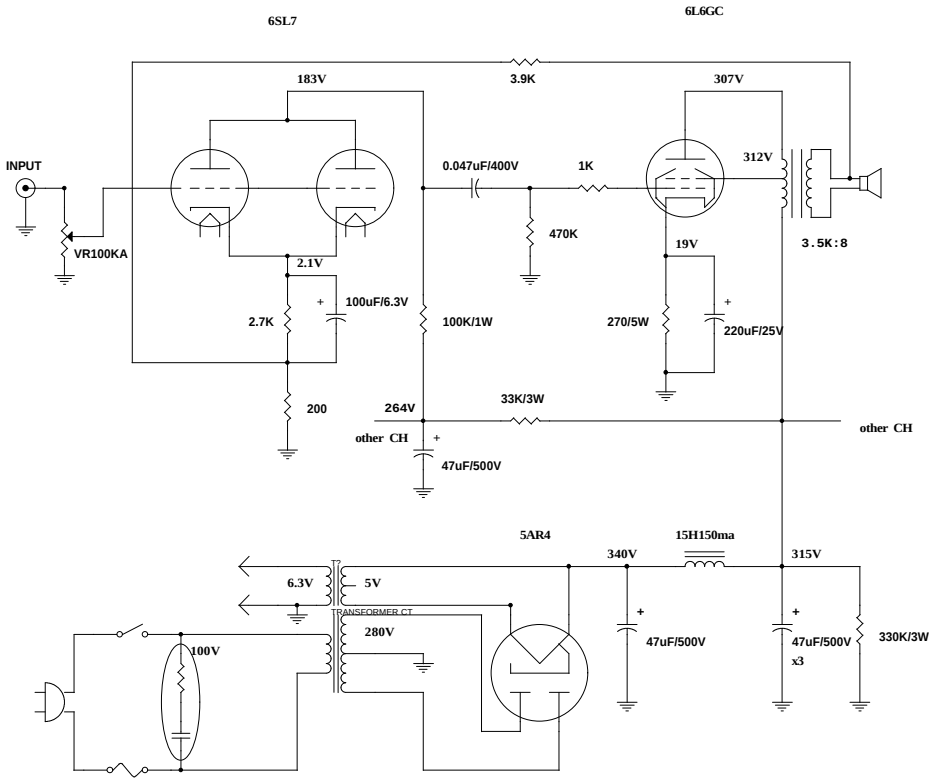

Title	{Title}	
Size C	Document Number {Doc}	Rev {RevCode}
Date: Thursday, August 12, 1999	Sheet 1 of 1	