RCA-42 PUSH-PULL POWER AMPLIFER

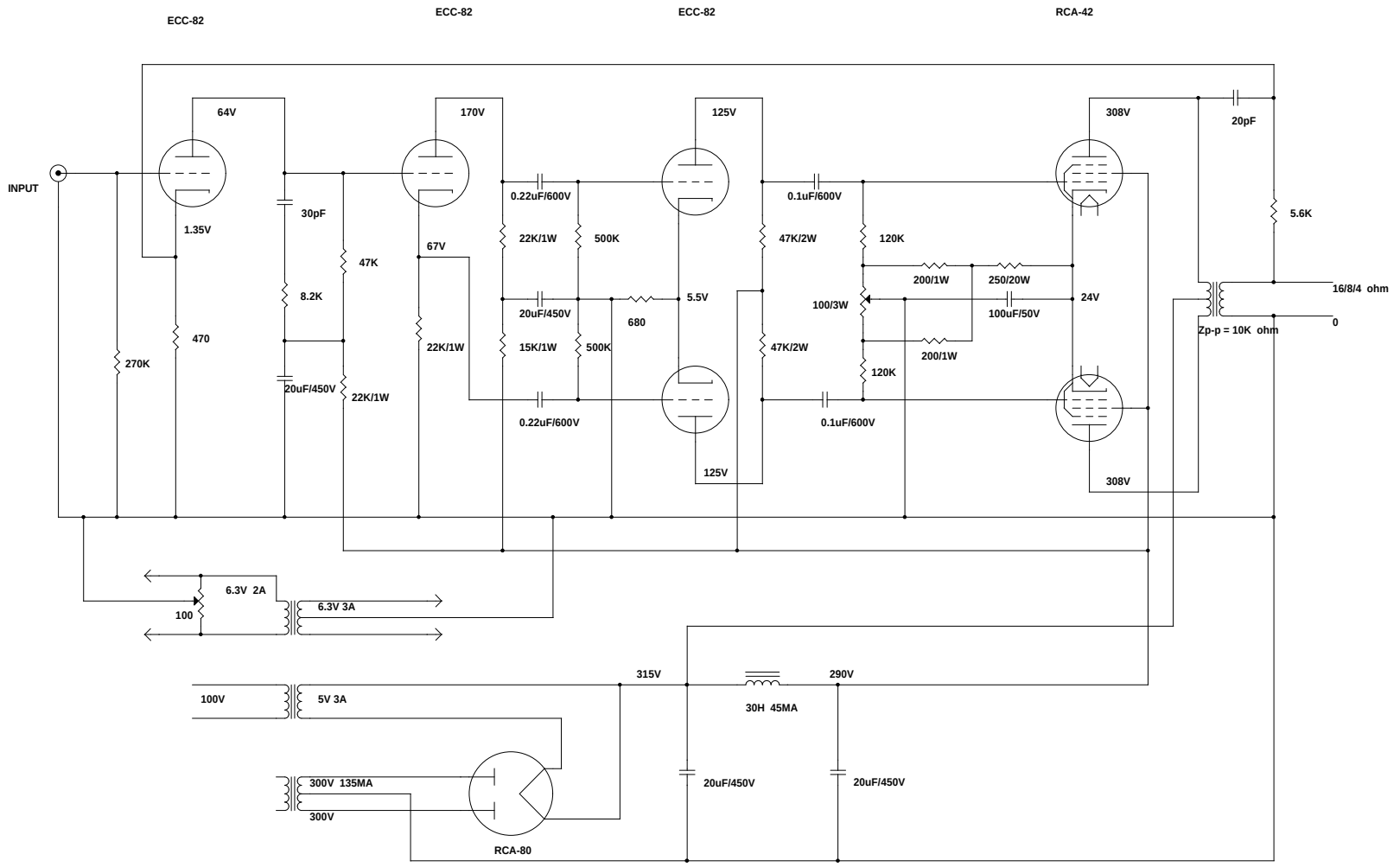

DIYZONE		
Title {Title}		
Size C	Document Number {Doc}	Rev {RevCode}
Date: Tuesday, August 17, 1999	Sheet 1 of 1	